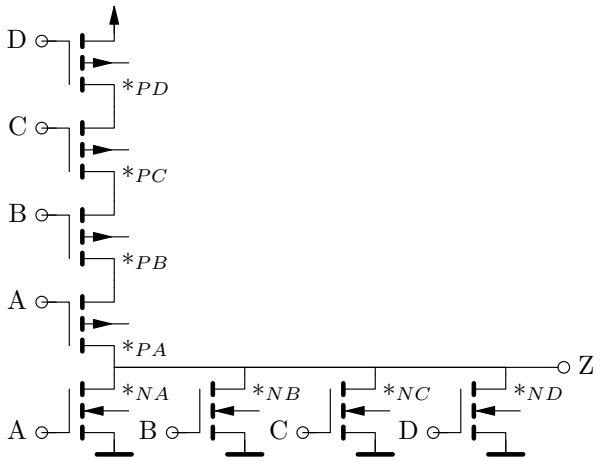Schematic (two stage, $4T_p/1T_n$ stacked, $10T$ total)