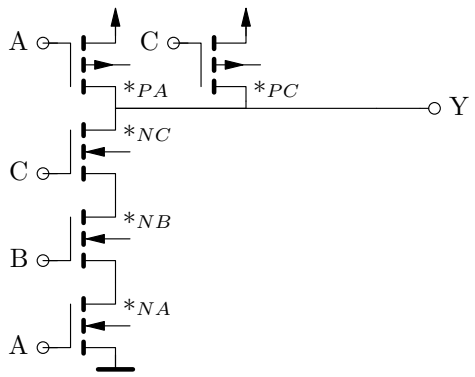Schematic (one stage, $1T_p/3T_n$ stacked, $6T$ total)