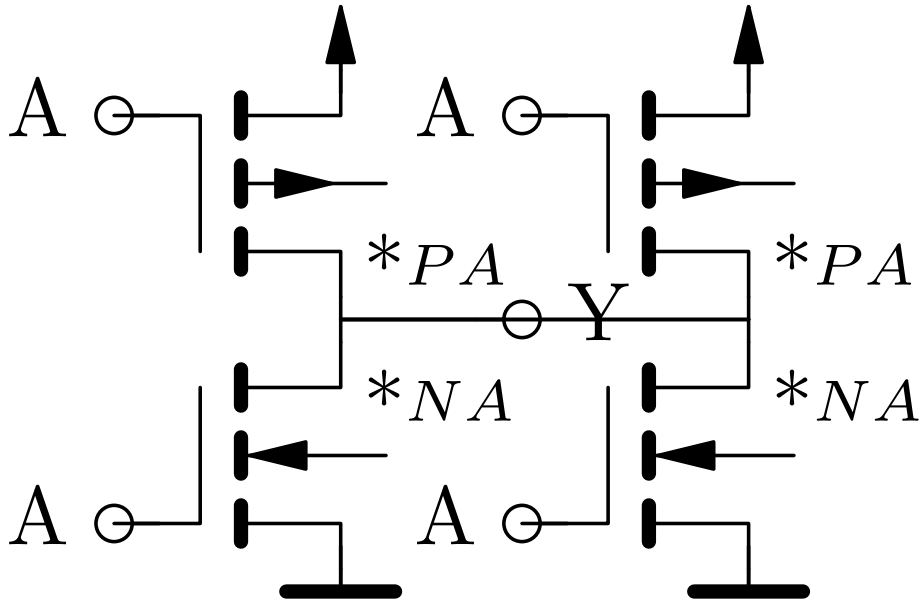Schematic (one stage, $1T_p/1T_n$ stacked, $8T$ total)