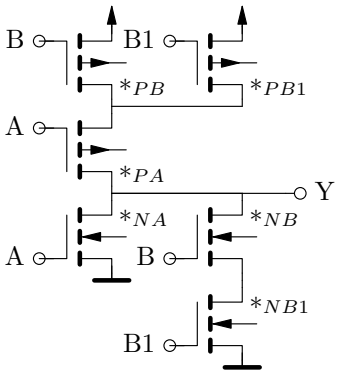Schematic (one stage, $2T_p/2T_n$ stacked, $6T$ total)