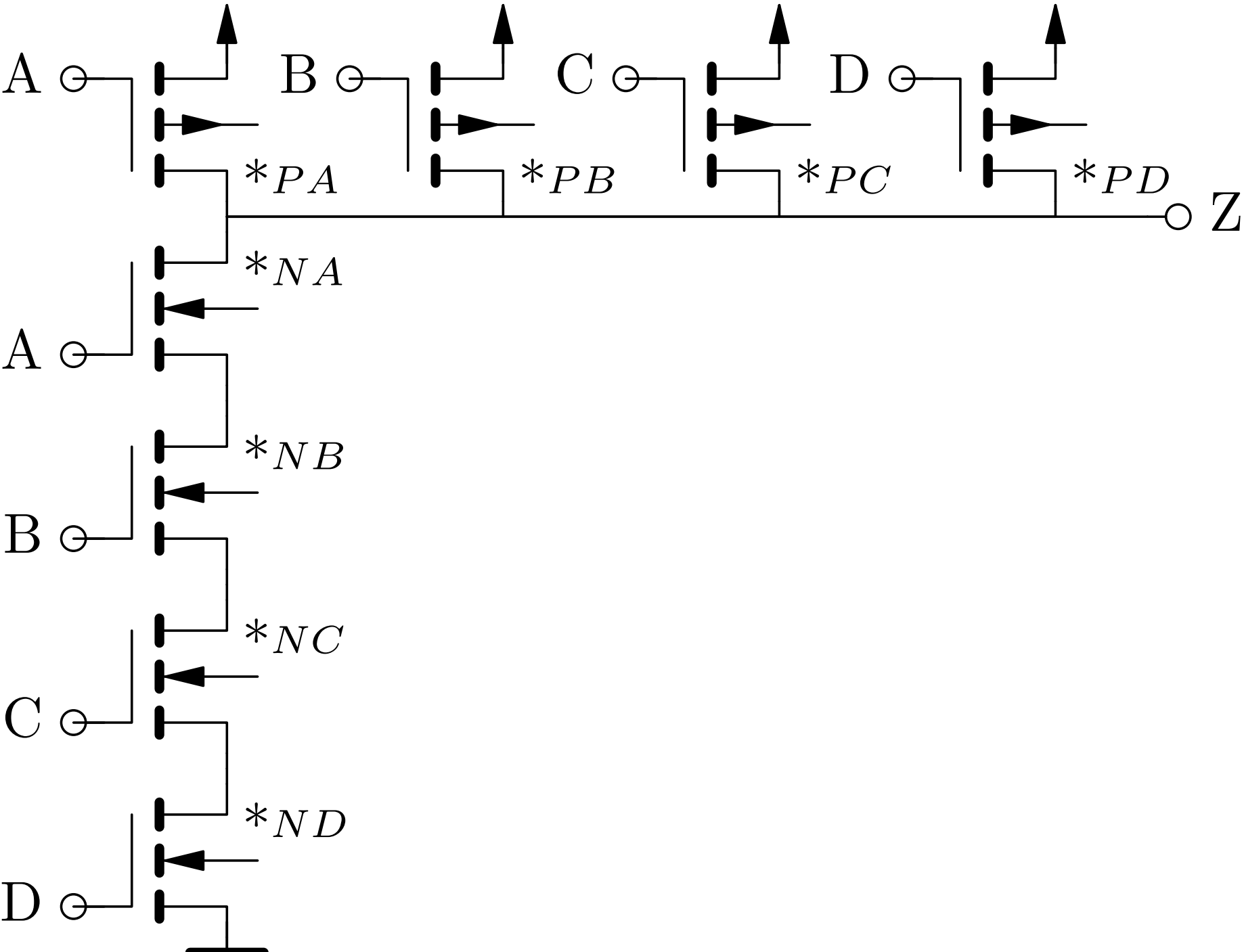Schematic (two stage, $1T_p/4T_n$ stacked, $10T$ total)